Introducing

CeeLok FAS-T Connectors, Cable Assemblies, and Associated Products

TE's CeeLok FAS-T connector is the most **rugged, small form factor, 10 Gigabit Ethernet, field terminable I/O connector** in the Aerospace, Defense and Marine marketplace. It has been designed to perform in some of the most extreme environments in the industry, while providing substantial size and weight savings via its small shell size 8 form factor.

TE also offers associated products such as Band Straps, Termination Devices, Molded Boots, Wire and Cable and complete harnessing capabilities that complement this exciting new connector.

TE connectivity

KEY FEATURES

- 1 Gbit-Ethernet and 10 Gbit-Ethernet when used with Cat 5e, Cat 6A or Cat 7 cables
- Crimp snap, 39029-style contacts for easy termination and field repairability
- Backshell integrated in plug body provides low profile, low cost, low weight strain relief and EMI protection
- T-shaped pin pattern improves SI through uniform crosstalk cancellation

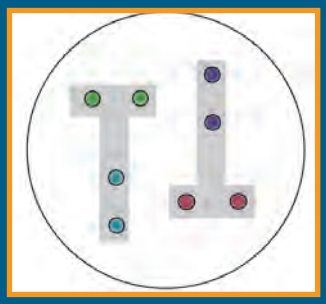

- Compatible with multiple braid terminations, adaptor styles and seal boots
- Scoop-proof design
- Insert assembly mechanically retained for ≤ 25 lb. retention force
- Robust coupling ring mechanism
- Size 8 shell saves weight and space

APPLICATIONS

- 1 Gbit-Ethernet or 10 Gbit-Ethernet in extreme aerospace, defense and marine environments such as:

Military

- Rotary and Fixed Wing
- Ground Vehicles
- Soldier Systems
- Missiles and Smart Munitions
- Space
- Shipboard
- C4I

Commercial and Civilian Aircraft

- In Flight Entertainment & Connectivity
- Production Breaks (high speed signal)
- Avionics
- Communication Systems

ELECTRICAL

- 1 Gbit-Ethernet and 10 Gbit-Ethernet when used with Cat5e, Cat6A or Cat7 cables
- Electrical performance specifications:
  - Insulation resistance: 5000 mega-ohms ambient, 1000 mega-ohms at 175˚C
  - Dielectric withstanding voltage: 500 VAC sea level, 100 VAC @ 70,000 ft.
  - Shielding effectiveness per MIL-DTL-38999
  - Shell to shell conductivity - 5mV initial, 10mV final

MECHANICAL

- Performance specifications:

- Vibration, Sine:	MIL-DTL-38999 Series III (60G), 4 hrs per axis, no elevated temperature
- Vibration, Random:	EIA-364-28 Condition VI Letter J (43.92G)
- Durability:	500 mating cycles
- Contact Retention:	10 lb. min.
- Coupling Torque:	8 in-lb. max.

ENVIRONMENTAL PROPERTIES

• Operating Temperature:	-65˚C to +175˚C
• Sealing:	
Altitude Immersion:	70,000 ft. (mated condition)
IP67:	Mated condition
IPX6 (water jet):	Receptacle, panel mounted (unmated condition)
• Corrosion Resistance:	500 hr. Salt Mist - Black Zinc Nickel

MATERIALS:

Shell:	Shells available in Electroless Nickel or Black Zinc for DOD-Approved, RoHS compliant, corrosion resistance (500 hr Salt Mist)
Insert:	High temperature thermoplastic for excellent temperature endurance. Low dielectric constant for superior signal integrity.
Contacts:	BeCu alloy

STANDARDS AND SPECIFICATIONS

Product Specification:	108-2482
Application Specification:	114-32025
Instruction Sheet:	408-32046
Test Report:	501-134002

APPLICATION TOOLING

Hand Crimp Tool :	M22520/2-01
Crimp Positioner:	K1850
Insertion/Extraction Tool:	DHK696

PRODUCT DIMENSIONS

Boxmount Receptacle Kit Assembly
Part Number 2102343

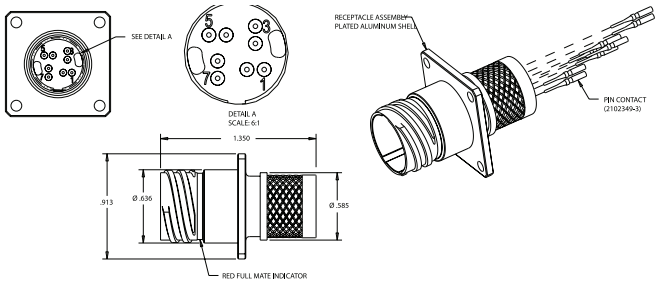

Jam Nut Receptacle Assembly, PC Tail
Part Number 2102351

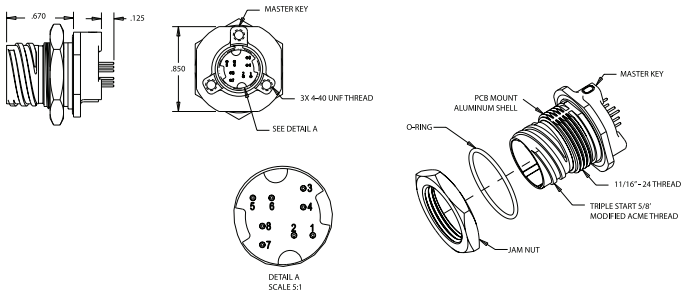

Receptacle Kit Assembly
Part Number 2102352

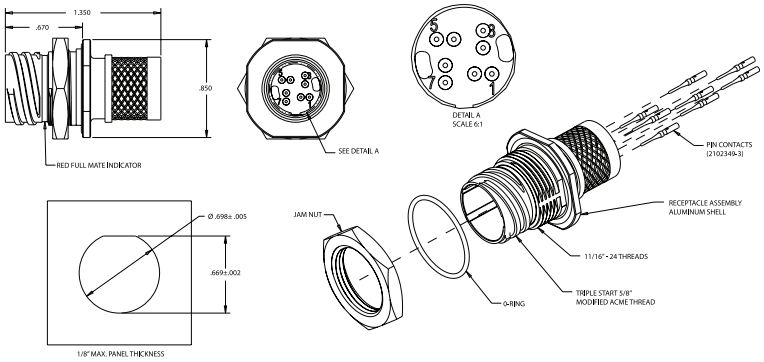

Plug Kit Assembly
Part Number 2102353

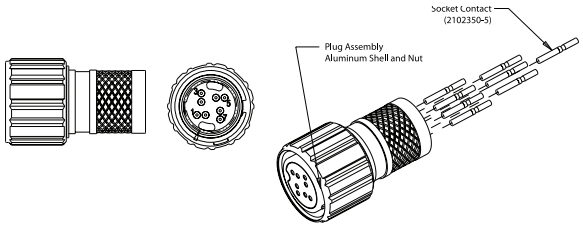

Boxmount Receptacle Assembly, PC Tail
Part Number 2102453

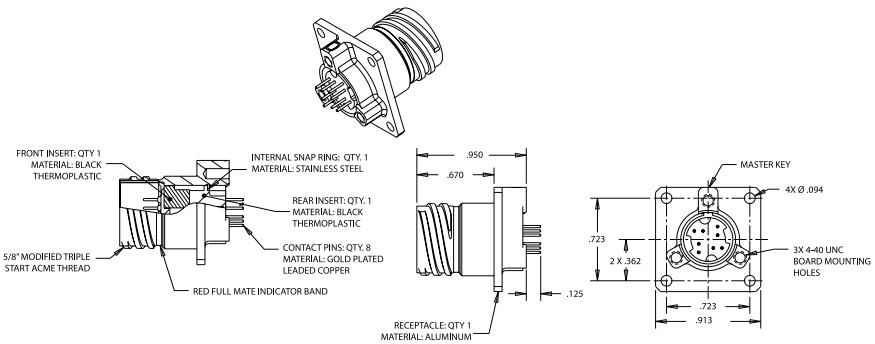

Pin Contact
24-26 AWG
Part Number 2102349-3

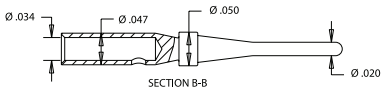

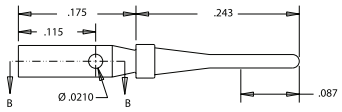

Socket Contact
24-26 AWG, Hooded
Part Number 2102350-5

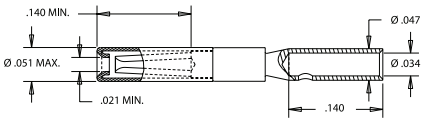

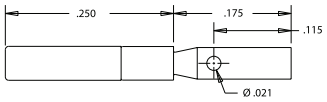

PRODUCT OFFERING

TE Part Numbers	Description	Plating	Key
2102343-1	Receptacle Kit, Boxmount	ElNi	N
2102343-2	Receptacle Kit, Boxmount	Black ZnNi	N
2102343-3	Receptacle Kit, Boxmount	ElNi	A
2102343-4	Receptacle Kit, Boxmount	Black ZnNi	A
2102343-5	Receptacle Kit, Boxmount	ElNi	B
2102343-6	Receptacle Kit, Boxmount	Black ZnNi	B
2102351-1	Jam Nut Receptacle, PC Tail	ElNi	N
2102351-2	Jam Nut Receptacle, PC Tail	Black ZnNi	N
2102351-3	Jam Nut Receptacle, PC Tail	ElNi	A
2102351-4	Jam Nut Receptacle, PC Tail	Black ZnNi	A
2102351-5	Jam Nut Receptacle, PC Tail	ElNi	B
2102351-6	Jam Nut Receptacle, PC Tail	Black ZnNi	B
2102352-1	Receptacle Kit	ElNi	N
2102352-2	Receptacle Kit	Black ZnNi	N
2102352-3	Receptacle Kit	ElNi	A
2102352-4	Receptacle Kit	Black ZnNi	A
2102352-5	Receptacle Kit	ElNi	B
2102352-6	Receptacle Kit	Black ZnNi	B
2102353-1	Plug Kit	ElNi	N
2102353-2	Plug Kit	Black ZnNi	N
2102353-3	Plug Kit	ElNi	A
2102353-4	Plug Kit	Black ZnNi	A
2102353-5	Plug Kit	ElNi	B
2102353-6	Plug Kit	Black ZnNi	B
2102453-1	Boxmount Receptacle, PC Tail	ElNi	N
2102453-2	Boxmount Receptacle, PC Tail	Black ZiNi	N
2102453-3	Boxmount Receptacle, PC Tail	ElNi	A
2102453-4	Boxmount Receptacle, PC Tail	Black ZnNi	A
2102453-5	Boxmount Receptacle, PC Tail	ElNi	B
2102453-6	Boxmount Receptacle, PC Tail	Black ZnNi	B

DESCRIPTION

- TE supplies proven technology for high bandwidth data links to customers in the aerospace, ground systems and marine industries. Military cable requirements are designed, manufactured and tested to perform reliably in harsh environments.
- Proper cable assembly is critical to realizing the full potential of the cable and connector technologies. TE's lightweight military cables and connector solutions are designed to reduce size and remove weight from your application, leading to benefits that include reduced fuel consumption and increased payload capacity.

PROTOCOLS

Data assemblies can be developed with the CeeLok FAS-T connector for the following high speed protocols:

- 100BASE-T Ethernet
- 1000BASE-T Ethernet
- 10GBASE-T Ethernet
- USB 2.0/USB 3.0
- SATA/eSATA

ELECTRICAL

Testing capabilities include:

- DWV/IR
- Characteristic Impedance
- Return Loss/VSWR
- Insertion Loss
- Crosstalk
- Attenuation
- Eye Diagrams, etc.

MECHANICAL TESTS AVAILABLE:

- Vibration
- Mechanical Shock
- Mechanical Durability

ENVIRONMENTAL TESTS AVAILABLE:

- Salt Spray
- Thermal Shock / Temperature Life
- Humidity / Fluid Immersion

TEST LAB

KEY FEATURES

- End-to-end systems solutions provider
- Quick design turnaround using in-house software
- Full electrical and environmental testing capability
- Certified test processes and equipment ensures optimal signal integrity
- Qualified assembly experts
- Complete lot traceability
- Reliability in harsh environments
- ISO 9001: AS 9100 certified

KEY FEATURES

- Available with and without pigtails
- Simple, quick termination
- Center or end strip for ease of termination
- Handles wide range of high data rate cables and diameters

DESCRIPTION

- TE's SolderSleeve shield terminators attach a ground lead to cable shield for the purpose of grounding the EMI on the shield.

ENVIRONMENTAL

- Operating Temperature: -55˚C to +200˚C
- Environmentally sealed
- Mechanically robust

PHYSICAL OR OTHER PROPERTIES

- Terminates Tin, Silver and Nickel flat or round braids
- Provides 360˚ of shielding

PRODUCT OFFERING

Contact TE for a complete listing of SolderSleeve Shield Terminators.

Band Straps

KEY FEATURES

- Quick, easy, cost-effective and reliable termination of braided metallic shielding
- Low profile, one-piece design eliminates EMI leakage paths
- Band should be double wrapped to provide effective shield termination

DESCRIPTION

- TE's CRES-Lock band strap provides a quick, easy, cost-effective and reliable termination of braided metallic shielding to the CeeLok FAS-T connector.
- Approved for aerospace and defense, the CRES-Lock band straps have successfully passed shock, vibration and environmental testing.

MATERIAL

- Passivated 304 stainless steel - 8" long x .125" wide

ELECTRICAL

- Operating Temperature: -65˚C to +200˚C
- Electrical Resistance: Meets ≤1.0 milliohm requirement of AS85049/128
- Corrosion Resistance: 500 hr. salt spray

MECHANICAL

- Tensile Strength: 200 lb.
- Braid Retention: Meets 100 lb. requirement of AS85049/128

APPLICATION TOOLING

- Micro Tie-Dex II, A30199

PRODUCT OFFERING

TE Part Numbers	Description
BND-0812-S	Band Strap

DESCRIPTION

- Backshell boots (molded parts) add sealing and strain relief to the wires and cables used with the CeeLok FAS-T connectors. When provided with pre-applied adhesives, these heat shrinkable boots install quickly with high reliability sealing to IP67 levels.
- Backshell boots can be either straight, 45 or 90 degrees in shape to fit a variety of installation needs.

APPLICATION TOOLING

- HL1910E or the HG-501A ThermoGun heat gun and appropriate hot air reflectors

PRODUCT OFFERING

Part Number	Description - Straight Boot	Part Number	Description - 90˚ Boot	Operating Temperature
878182-000	202K132-12-0	**878183-000**	222K132-12-0	-55˚C to 200˚C
481350-000	202K132-25/225-0	**131250-000**	222K132-25/225-0	-75˚C to 150˚C
878495-000	202K132-25-0	**878512-000**	222K132-25-0	-75˚C to 150˚C
879222-000	202K132-25/86-0	**879268-000**	222K132-25/86-0	-55˚C to 120˚C
879514-000	202K132-4/42-0	**879515-000**	222K132-4/42-0	-20˚C to 60˚C
822542-000	202K132-4-0	**822548-000**	222K132-4-0	-55˚C to 135˚C
830903-000	202K121-4/42-0	**273122-000**	222K121-4/42-0	-20˚C to 60˚C

KEY FEATURES

- Only one boot needed for lower inventory cost
- Boots available in 3 configurations - conforms to the installation
- Boot materials of various temperature angles for ease of installation in different environments
- Epoxy sealing kits available

High Data Rate Cables

DESCRIPTION

- Lightweight, ruggedized high speed copper cables complete the CeeLok FAS-T connector end-to-end solution. Designs are available to meet a number of common data protocols, and can be customized to meet mission critical needs such as EMI, fluid resistance, and flammability.
- These high data rate cables utilize specialized polymer formulations, developed by TE that allow better mechanical and thermal performance in harsh environments. These polymer formulations enable the cables to be smaller and lighter weight because of TE's thin wall technology.
- For aerospace applications, TE has developed a state-of-the-art patented foaming process which affords better signal transmission through the dielectric. This lightweight material is rated to withstand temperatures up to 200˚C, and is FAA approved.
- For marine applications, TE developed a ruggedized zero halogen jacket that passes the rigorous military standards for flammability while meeting stringent smoke and toxicity requirements.
- TE also offers solutions to couple with the CeeLok FAS-T connector in marine and ground system markets where fluid resistance and flexibility are paramount.

CABLE PROTOCOL DETAILS

- Operating temperature range from -55˚C to +200˚C
- Size range: 22 AWG to 28 AWG
- FAA approval
- Electrical testing capability including skew and eye pattens
- Full range of EMI shielding options
- Customized and hybrid designs available

CABLE PROTOCOLS

- **ETHERNET:**
  - Quadrax (100BaseT, 100 Mbit/s)
  - Cat 5e (1000 BaseT or Gigabit Ethernet, 1 Gbit/s)
  - IEEE 1394
  - USB

FOR MORE INFORMATION
TE Technical Support Center

Internet:	www.thefutureunleashed.com www.te.com/ADM
USA:	+1 -800-522-6752
China:	+86 400-820-6015
Germany	+49 6151-607-1999
United Kingdom	+44 -0800-267666

te.com/ADM

©2012 Tyco Electronics Corporation, a TE Connectivity Ltd. Company.
All Rights Reserved.

1-1773464-2 2.5M ADM/RRD 04/2012

CeeLok FAS-T, SolderSleeve, ThermoGun, TE Connectivity and TE connectivity (logo) and TE (logo) are trademarks of the TE Connectivity Ltd. family of companies. Other logos, product and/or company names might be trademarks of their respective owners.

While TE has made every reasonable effort to ensure the accuracy of the information herein, nothing herein constitutes any guarantees that such information is error-free or any other representation, warranty or guarantee that the information is accurate, correct, reliable or current. The TE entity issuing this publication reserves the right to make any adjustments to the information contained herein at any time without notice. All implied warranties of merchantability or fitness for a particular purpose are expressly disclaimed. The dimensions herein are for reference purposes only and are subject to change without notice. Specifications are subject to change without notice. Consult TE for the latest dimensions and design specifications.

TE connectivity