DO NOT SCALE | DIMENSIONS IN MM.

C.A.D. FILE CODE
S. C344111. J

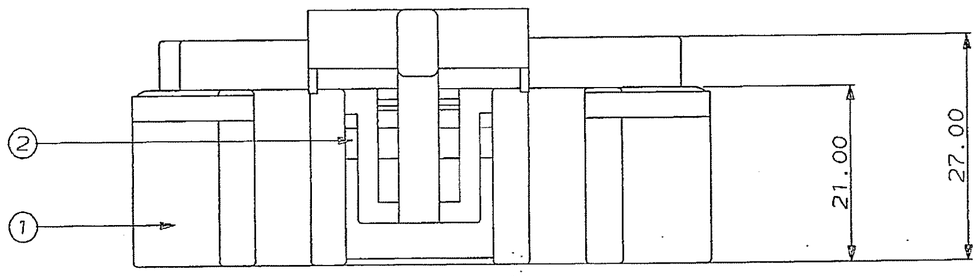

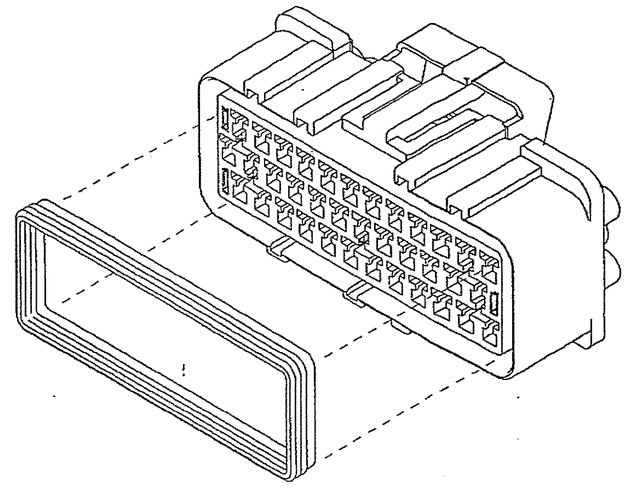

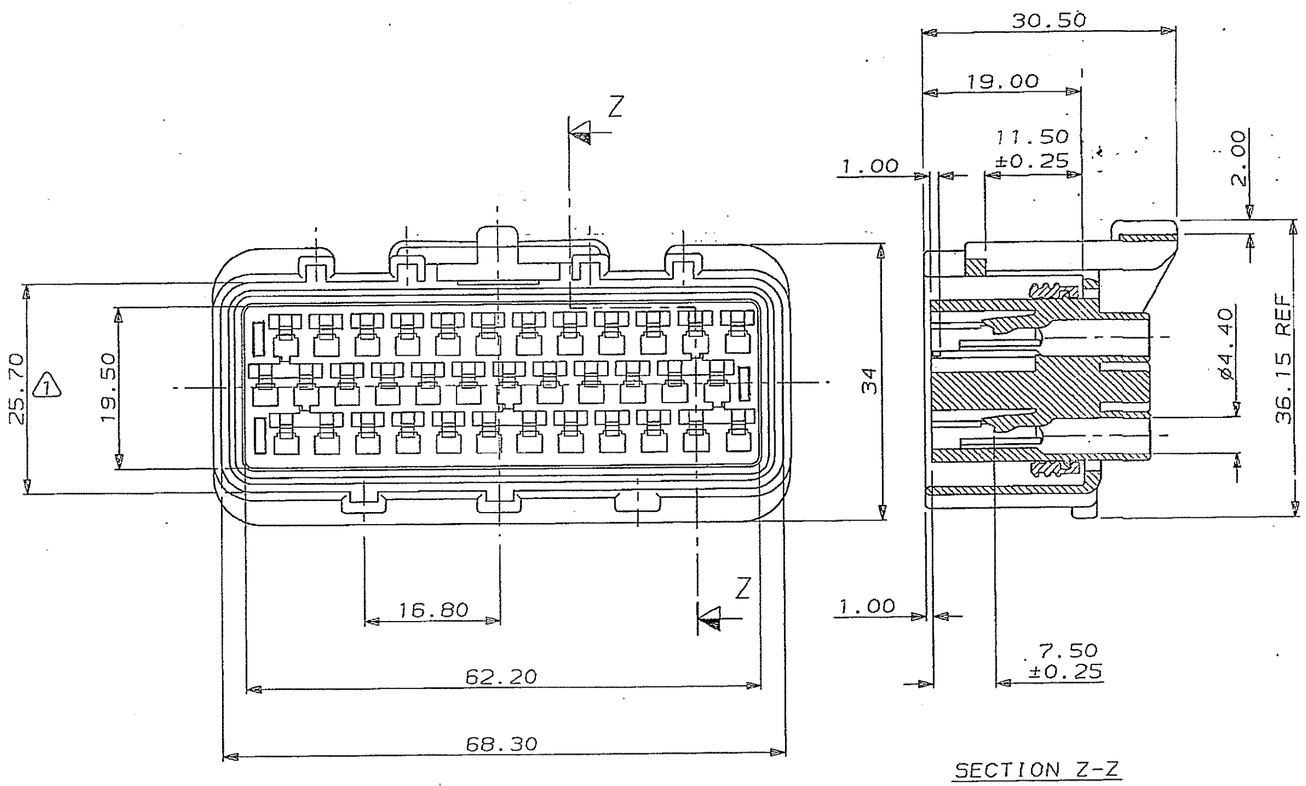

SECTION Z-Z

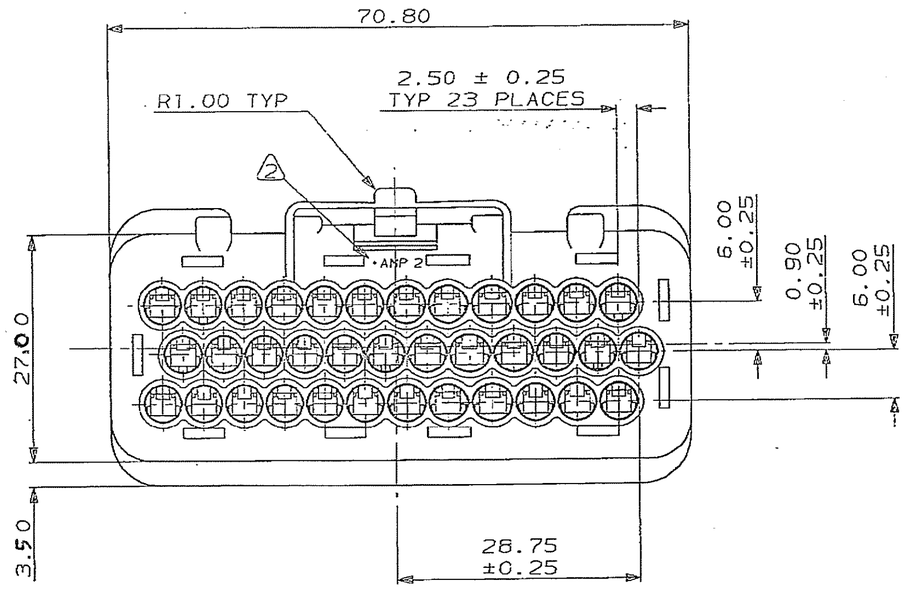

NOTES:

1. THIS DIM. TO APPLY AT THE CORNERS OF THE SHROUD. AT THE POINT OF MAXIMUM BOW, THIS DIM. IS TO BE 23.60 MIN.
   THIS IS A CONTROL DIM. MONITORED AT AMP.
2. AMP STAMP, DOT CODE & IMPRESSION NUMBER

ITEM No.	MATERIAL	COLOUR	DESCRIPTION	QTY. PER ASSY.
2	SILICONE RUBBER	ORANGE	PERIPHERAL SEAL	1
1	NYLON 66	BLACK	36 WAY REC. HSG.	1

ASSEMBLY PART No. 344111-1

REV	APPROVED	ECO	DATE
J1	RK/HMR	REVISED PER ECO-11-005150	28MAR11

CUSTOMER DWG
FOR REFERENCE ONLY

RELEASED FOR PUBLICATION 23-6-87

TOLERANCES UNLESS OTHERWISE STATED : DEC ± 0.5 ANGLES ± 1°

DR. Mick Wade 23-6-87
CH. R.J.S. APP. R.J.S.

TE Connectivity

NAME 36 WAY RECEPTACLE HOUSING ASSY. FOR ECONOSEAL 3 (WIRE TO BOARD)

SCALE	LOC	SIZE	DWG. No.	REV	SHEET
2/1	E	A2	C344111	J1	1/1

FORMAT 22/05/85

--0.TIF-10/30/03 7:25:20 AM